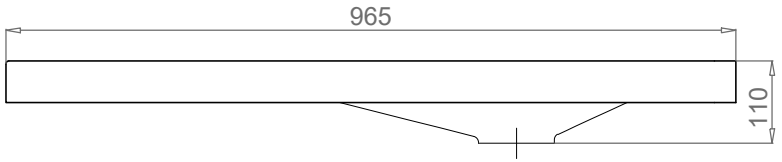

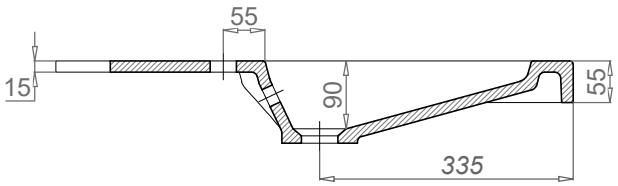

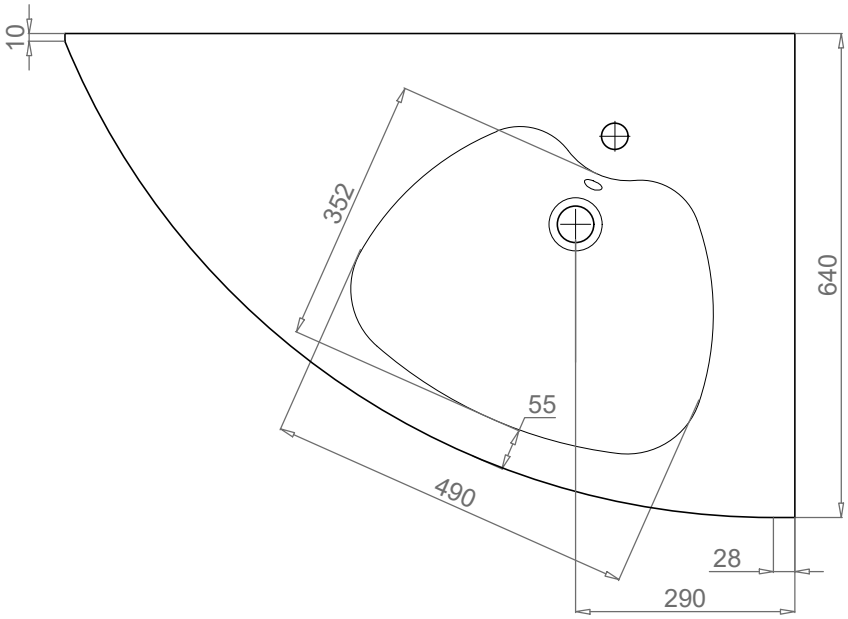

Condrieu 965 - D

Mineral Products International